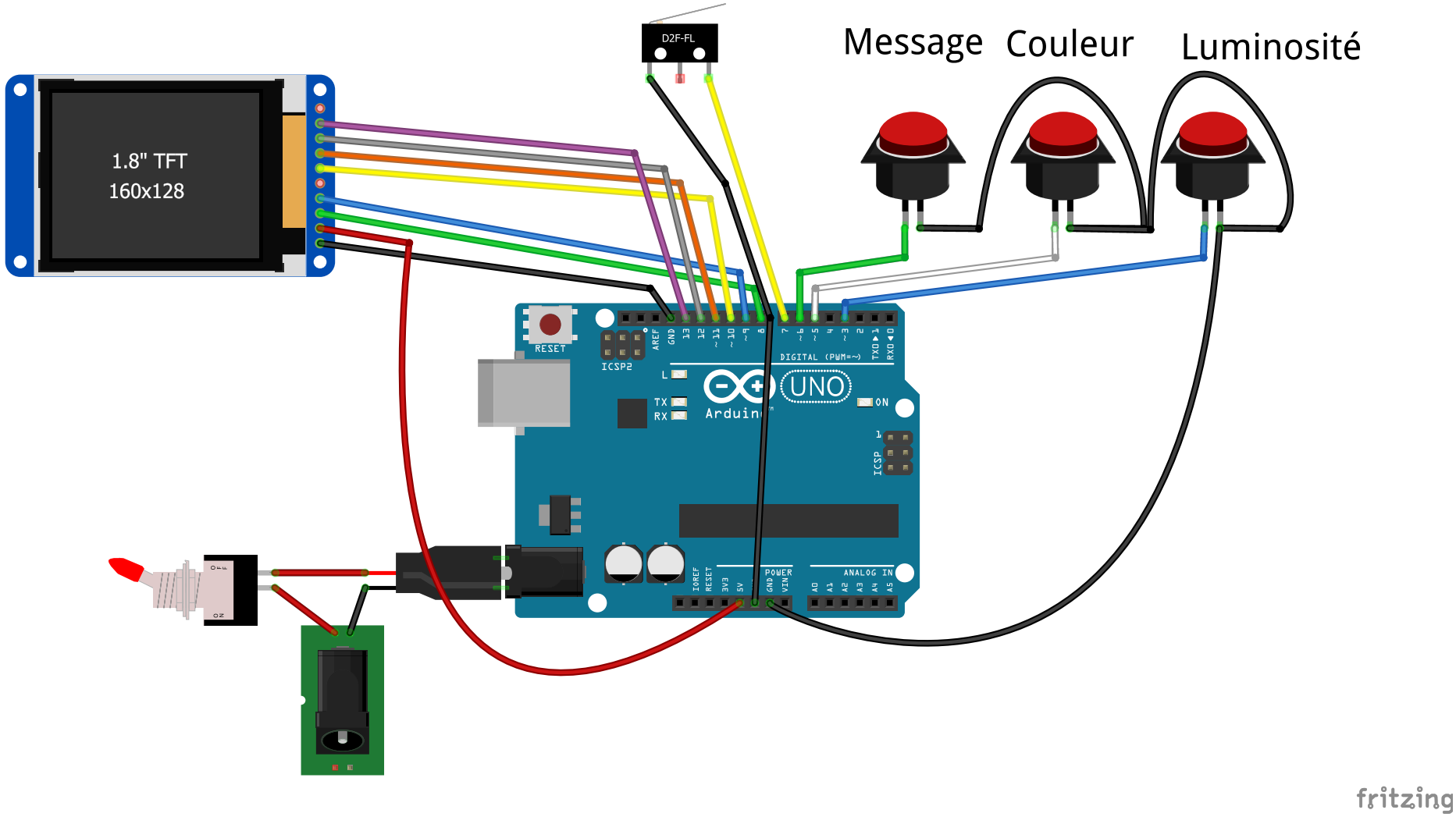
D2F-FL
Message
Couleur
Luminosité
1.8" TFT
160x128
RESET
ICSP2
AREF
GND
13
12
~11
~10
~9
8
7
~6
~5
4
~3
2
TX→1
RX←0
DIGITAL (PWM=~)
L
TX
RX
UNO
Arduino
ON
ICSP
IOREF
RESET
3V3
5V
GND
GND
VIN
POWER
ANALOG IN
A0
A1
A2
A3
A4
A5
OFF
ON
fritzing